GARDEN RR INFRASTRUCTURE PLANNING

What do you want your RR to do?

- Industries, towns or simply an operating layout (track and nothing else)?
- **Basic Loop** – Most common and simplest. Must consider minimum radius.
- **Point to Point** – Best for long narrow area. Return loops can complicate things (reverse loops). Simplest is passing tracks.
- **Over and Under** – Adds much more interest to layout. Need to consider grades

Terraforming or Going Vertical?

This is terraforming.

This is going vertical.

Terraforming: Flat or Grades

- Evaluating your yard

If your yard is flat, flat is the easiest. Minimal excavation.

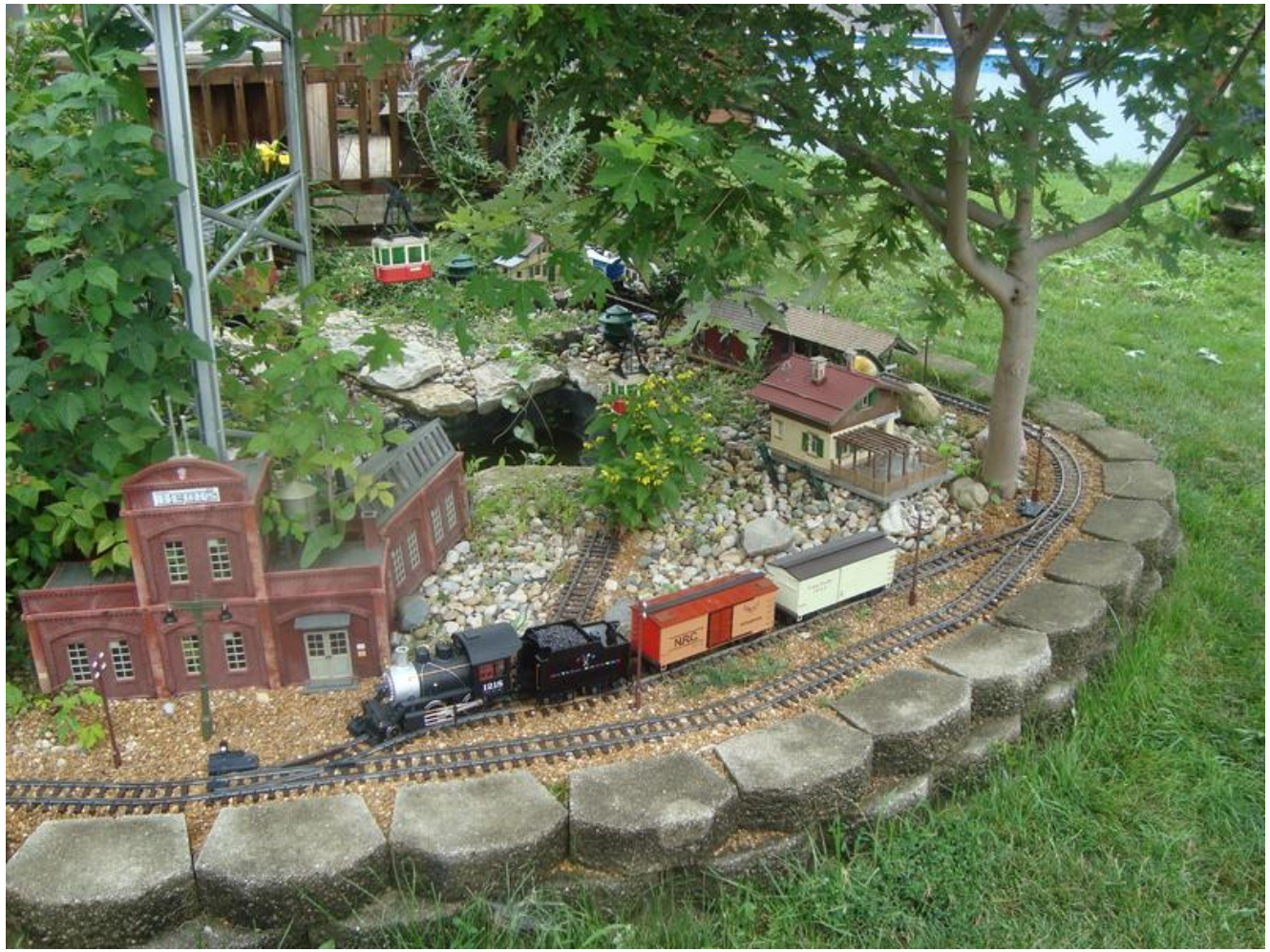

Terraforming: Flat or Grades

Slopes: If your yard has any kind of a slope, then you're going to have to raise one or more ends to get a flat layout. This can be done by elevating or filling.

FILL MATERIALS AND RETAINING WALLS

- Whether your yard is flat or slopped, you will probably need to do some filling. You may wish to slightly raise a flat layout to make it easier on your back.
- Here's an example of a slightly raised layout.

FILL MATERIALS AND RETAINING WALLS

Recommended fill materials:

- Stone
- Dirt with no or very little organic material
- Crushed stone (Stone Dust, Crusher Fines, Decomposed Granite)

FILL MATERIALS AND RETAINING WALLS

- Below is an example of a layout on a slopped yard. This retaining wall is 3 ft. high and was glued together with concrete adhesive. The wall, since it’s not cemented, acts as one big weep hole.

My wall has been in place for almost 9 years and shows no signs of cracking or tilting. A good, compacted and level base is critical.

FILL MATERIALS AND RETAINING WALLS

What materials you place under your roadbed are critical. Improper backfilling can result in frost heave and collapse. To ensure proper drainage and stability, as the wall went up in height, I backfilled with 2” stone. This allowed for very good drainage.

FILL MATERIALS AND RETAINING WALLS

After wall was completed and the rock installed, local dirt (mostly clay) was added to within about 6 inches of the top of the wall. The dirt was compacted and carefully leveled.

Next weed block was put down and stapled. Finally, 2”-3” of stone dust was laid in, leveled, and compacted with water. The area was then ready for track to be installed.

RETAINING WALLS

Here are a few types of retaining walls.

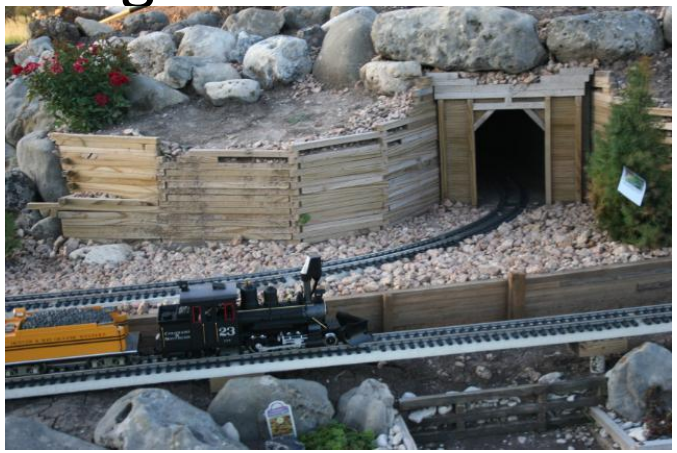

DRAINAGE, DRAINAGE, DRAINAGE

- In any case, no matter what the lay of your land is, if you build on the ground, you must FIRST consider drainage. Heavy water flow is responsible for most of the damage to RR's. (On rare occasions, trees can also cause severe damage.)

RAILROADS WITH GRADES

Basic loop and point-to-point layouts can be done without considering grades. But, either of these can include grades.

Most definitely, **over-and-under** layouts require grades.

How much grade it too much? Generally speaking anything over 4% is considered to be too hard on engines. However, one can run short, 3-5 car trains up steep grades with most engines.

Most garden RR experts agree that railroad grades should be held to no more than 2%.

RAILROADS WITH GRADES

Here is an example of an over-and-under RR.

RAILROADS WITH GRADES

OVER-AND-UNDER RR CONSIDERATIONS:

Vertical clearance requirements for garden RR's (Bridges and Tunnels).

- First thing to consider is the height from the top of the rail to the top of the stack of your tallest engine.
- Also consider the heights of the stacks on cabooses and specialty rolling stock.
- These heights are also dependent on the scale you are running.
- Most experts agree that the minimum clearance height should be at least **9 ½"**. This is from top of rail to bottom of bridge/inside of tunnel.

RAILROADS WITH GRADES

- **OVER-AND-UNDER RR CONSIDERATIONS:**
- Let’s do a calculation:
  - If you want to maintain a max. 2% grade and climb from the base of your layout to the bridge or pass over a tunnel then you need to factor in the thickness of the bridge plus ties and rails or the thickness of the tunnel top plus track and ballast.
  - Let’s say the total height from the top of the lower rail to the top of rail over the bridge or tunnel is 12”, then
    - **1ft. Divided by 0.02 = 50ft.**
  - This means you need 50 ft. to get to the top of your hill and 50 ft. to get back down. That’s a lot of space.

TUNNELS

Since we are talking about grades, let’s talk tunnels.

- Tunnels should not be any longer than twice the length of your longest arm without the use of an access hole midway.
- Tunnels should be constructed out of waterproof materials, preferably stone, tile or concrete.
- Drainage should be installed on each side of tunnel.
- Tunnel should be wrapped in plastic before back filling and covering with dirt.

Following this advise should lead to a tunnel that lasts a lifetime.

TUNNELS

- Here is an example of a well-built tunnel:

TUNNELS

- Well-built tunnel continued.

TUNNELS

- Here’s an example of a tunnel built out of pressure treated wood that looks substantial but may not last.

ROADBED

The next item to consider is roadbed. There are many variations but I'm only going to show the three best options, in my opinion.

- The first option and probably the most common is **<u>trenching</u>**.

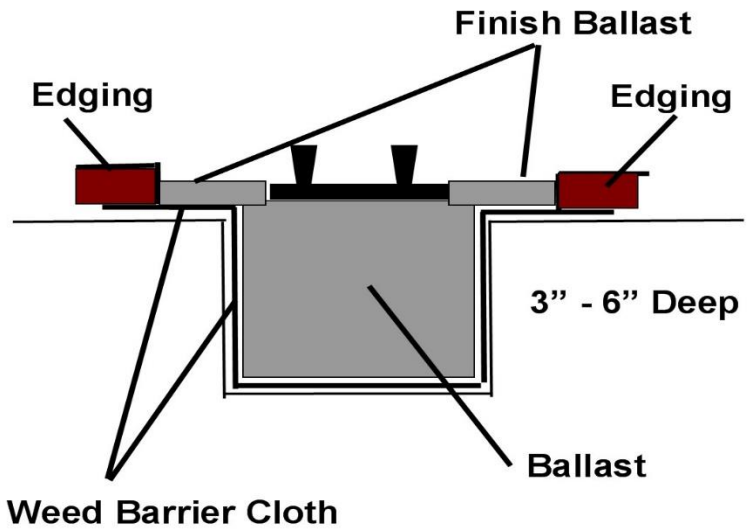

After digging the trench and installing a weed barrier, the ballast used to fill the trench must be watered in several times to ensure the ballast is compacted. Then it must be tamped and leveled.

Edging is then installed to contain the finish layer of ballast.

The width of the trench can be anything.

ROADBED

- The next option is called the **<u>ladder method</u>**. Below are two examples of a ladder support system. Notice the backfilling on the left. Ladder systems can be used to elevate RR's to almost any height.

ROADBED

- Below is a drawing of a typical ladder structure.

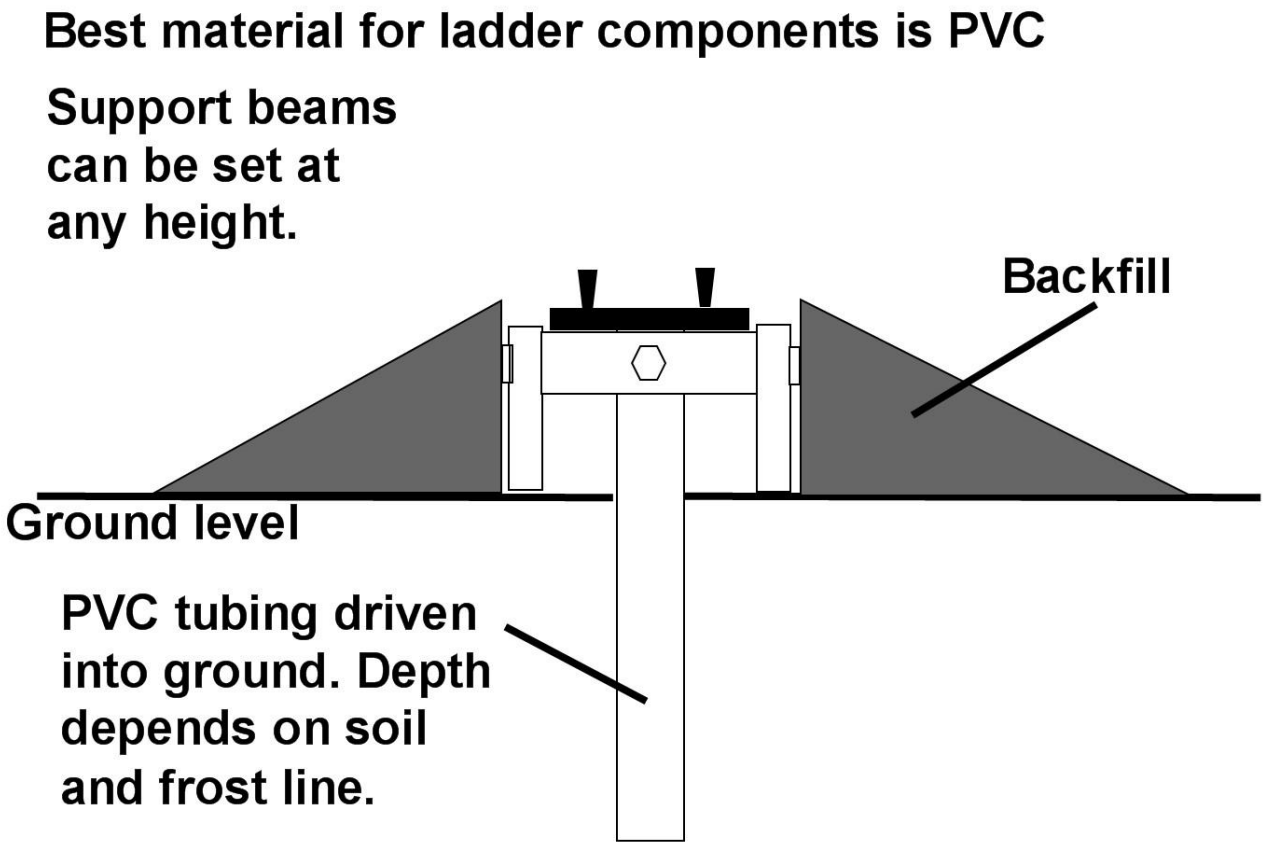

ROADBED

- The third option involves using a concrete pad.

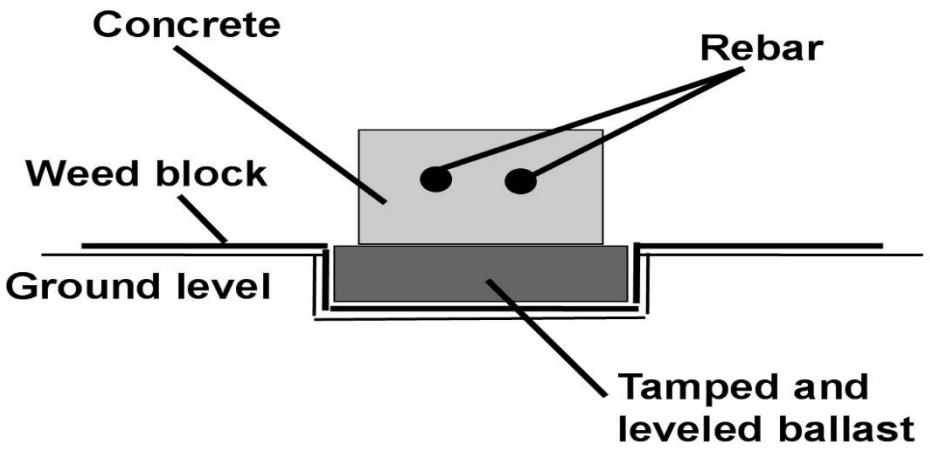

Concrete pad can be poured in sections as long as rebar extends enough to lock adjoining sections.

Width of trench can be anything based on number of parallel tracks you wish to support.

Depth of trench should be at least 4 inches.

Ballast can be added to cover concrete.

ROADBED

- An example of concrete roadbed:

ROADBED

- Here’s an interesting example of combining concrete and ladder roadbeds.

ROADBED

- Summary:
  - Floating roadbed in ballast is **easiest** to install and modify.
  - Ladder roadbed is **relatively** easy to install and modify.
  - Concrete roadbed is **most difficult** to install and almost impossible to modify.
- Adding any type of binder to roadbed ballast is optional. Binders keep ballast from washing away but constant freezing and thawing can break up bound ballast over time. If binder is used, it can make modifications difficult.
- YOU DECIDE

ELEVATED RAILROADS

- For those of you who do not wish to bend over to run trains there’s a solution – Elevate.
- Most preferred for live steam operations.
- Advantages:
  - Easy to load and work on trains.
  - No weeds on and around track.
  - Track cleaning is easier
- Disadvantages:
  - No room for structures.
  - Limited room for train storage.
  - Not easy to add landscaping.

ELEVATED RAILROADS

The ladder system is probably the least expensive and easiest to install type of raised roadbed.

This example illustrates using a ladder system to go from ground level to elevated. Notice that PVC support tubing is setting on concrete post blocks.

ELEVATED RAILROADS

- Other examples of elevated RR's.

OTHER CONSIDERATIONS

- Plants:
  - Trees, shrubs and ground covers:
    - Most popular trees: Dwarf Alberta Spruce, Chinese Boxwood, Burberry, other dwarf evergreens.
    - Most popular ground cover: Thymes, Creeping Jenny, Moss, Ice plants.

OTHER CONSIDERATIONS WHEN PLANNING A RR

- **Pathways:** If your RR is relatively deep, you may want to leave some space to walk to internal areas for maintenance purposes.

- **Viewing:** When planning your RR, think about how it can be viewed. For instance, having a small hill (mountain) or tunnel can allow the train to disappear from view periodically.

- **Equipment Storage:** Leave enough room for sidings to park trains. By-pass sidings are best. You may also want to have a siding long enough to allow for a train storage shed.

OTHER CONSIDERATIONS WHEN PLANNING A RR

- **Maintenance:** All RR's, whether on the ground or elevated, require some kind of routine maintenance.
  - Track cleaning – rails, ballast and debris
  - Weeding, watering and planting
- **Rail expansion and contraction:** All metal expands and contracts – plastic not so much.
  - Consider using expansion sections every 20ft. or so
  - Floating track is much more forgiving than track that is anchored in some way.
  - Remove track screws when possible.
  - Failure to address rail expansion can cause rail to be torn from tie strips.
- **Radius of curves:** The wider the better.
  - Equipment scale is a big factor
  - Overhang is ugly

OTHER CONSIDERATIONS WHEN PLANNING A RR

- **Track Spacing:** This also depends on scale.
  - Generally accepted is 5”-6” center-to-center of track. If running 1:20.3, spacing should be at least 7”. I run about 8” on the average. Depends a lot on available space.

- **Track and Switch Selection:** Your call.
  - Everyone has a favorite Mfg. If you want large radius curves, sources may be limited.
  - If you choose to float your track on the ground, then code 332 is best. *You can walk on it if roadbed is done correctly.*
  - Any track that’s supported by something solid like a ladder or concrete then code 250 or even code 225 is fine.
  - Choose the widest radius switches possible, especially off mainlines. (I use #6’s).

OTHER CONSIDERATIONS WHEN PLANNING A RR

- **Power:** No matter what type of power you use, there will be some track maintenance required.
  - **Battery Power:** Several options but that's for another talk. However, battery power does require the least amount of track work.

  - **Track Power (DCC/RC):** Requires more maintenance – rail cleaning.
    - Size matters when it comes to power supplies (10 – 15 amp minimum).
    - Connectivity between sections of track is very important.
    - Rail joiners are not reliable.
    - Rail clamps are highly recommended.
    - Number of power connections to track is a matter of opinion.